SNMP

- Stands **Simple Network Management Protocol (SNMP)**
- It is an internet standard protocol for collecting and organizing information about managed devices on IP networks
- It helps to track the change in the device behavior
- Devices that typically support SNMP include cable modems, routers, switches, servers, workstations, printers, and more
- SNMP is widely used in network management for network monitoring

What is Network Monitoring?

Network monitoring is the use of a system that constantly monitors a computer network for slow or failing components and that notifies the network administrator (via email, SMS or other alarms) in case of outages or other trouble. Network monitoring is part of network management.

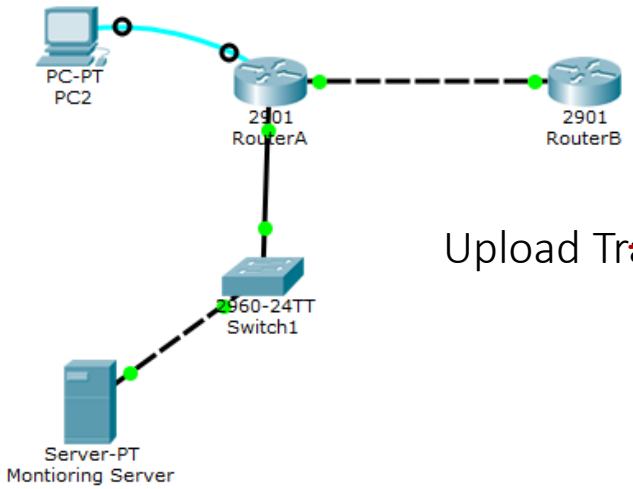

Upload Traffic

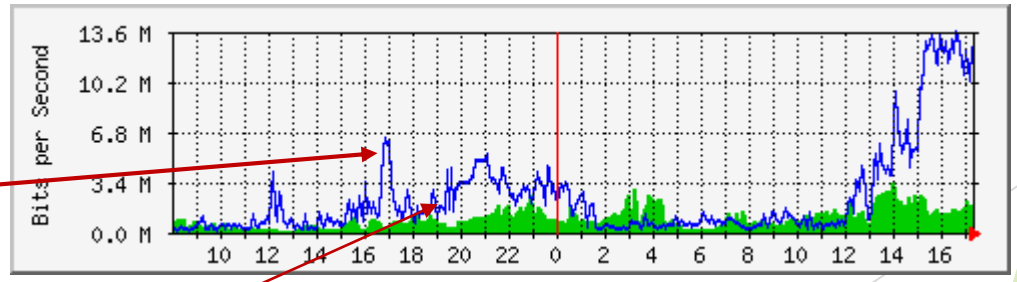

Download Traffic

- SNMP is widely used in network management for network monitoring.
- SNMP exposes management data in the form of variables on the managed systems organized in a management information base (MIB) which describe the system status and configuration.
- These variables can then be remotely queried (and, in some circumstances, manipulated) by managing applications.
- SNMPv1 is the original version of the protocol. More recent versions, SNMPv2c and SNMPv3, feature improvements in performance, flexibility and security.

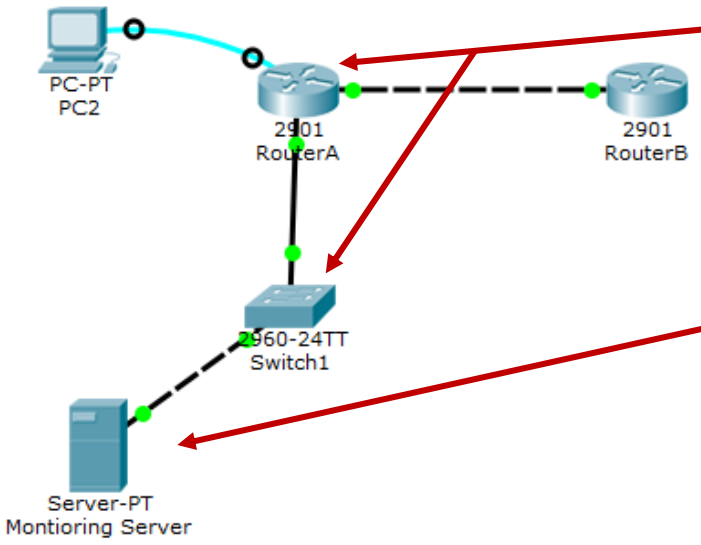

Agents:
Each managed system executes a software component called an ***agent*** which reports information via SNMP to the manager.

Managers:
In typical uses of SNMP, one or more administrative computers called ***managers*** have the task of monitoring or managing a group of hosts or devices on a computer network.

An SNMP-managed network consists of three key components:

- Managed devices
- Agent – software which runs on managed devices
- Network management station (NMS) – software which runs on the manager

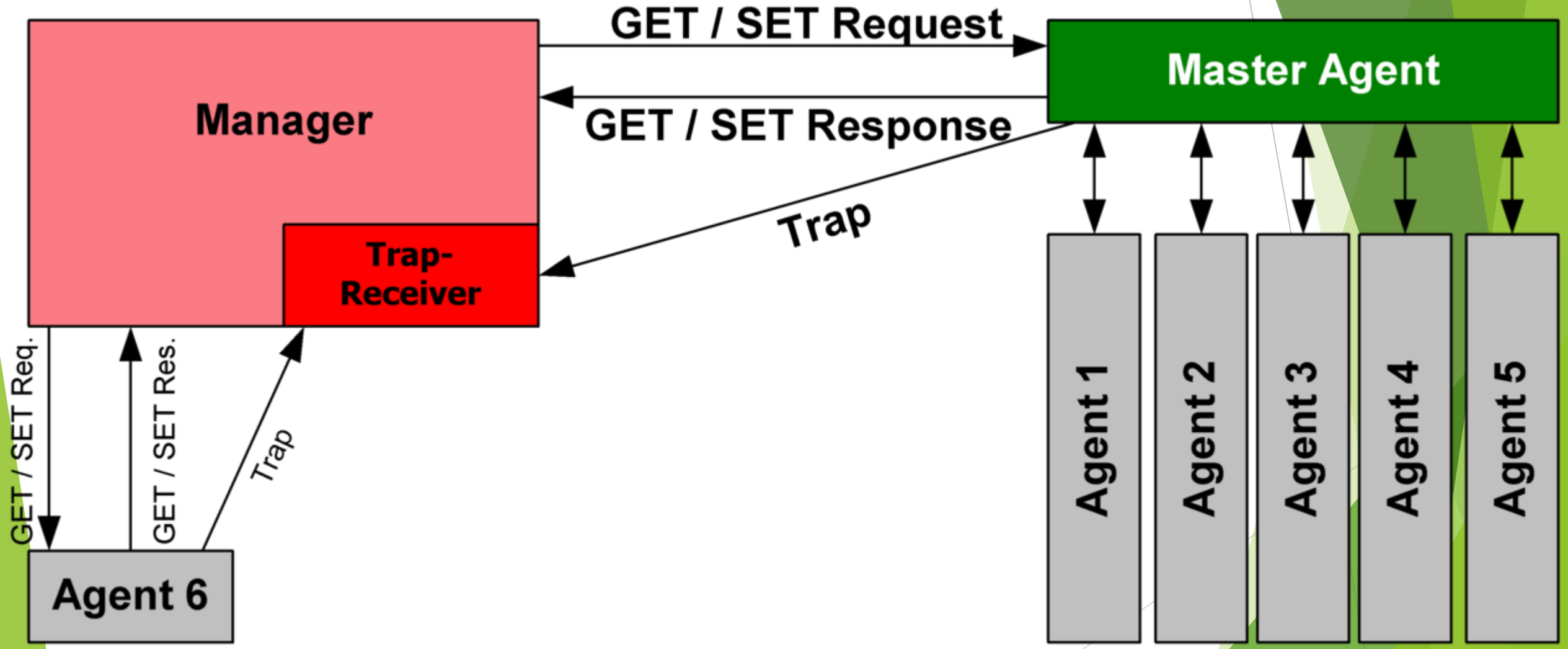
GET / SET Request
Master Agent
Manager
GET / SET Response
Trap
Trap-
Receiver
GET / SET Req.
GET / SET Res.
Trap
Agent 6
Agent 1
Agent 2
Agent 3
Agent 4
Agent 5

Management Information Base

- SNMP agents expose management data on the managed systems as variables.

- The protocol also permits active management tasks, such as modifying and applying a new configuration through remote modification of these variables. The variables accessible via SNMP are organized in hierarchies.

- SNMP itself does not define which information (which variables) a managed system should offer. Rather, SNMP uses an extensible design which allows applications to define their own hierarchies and metadata

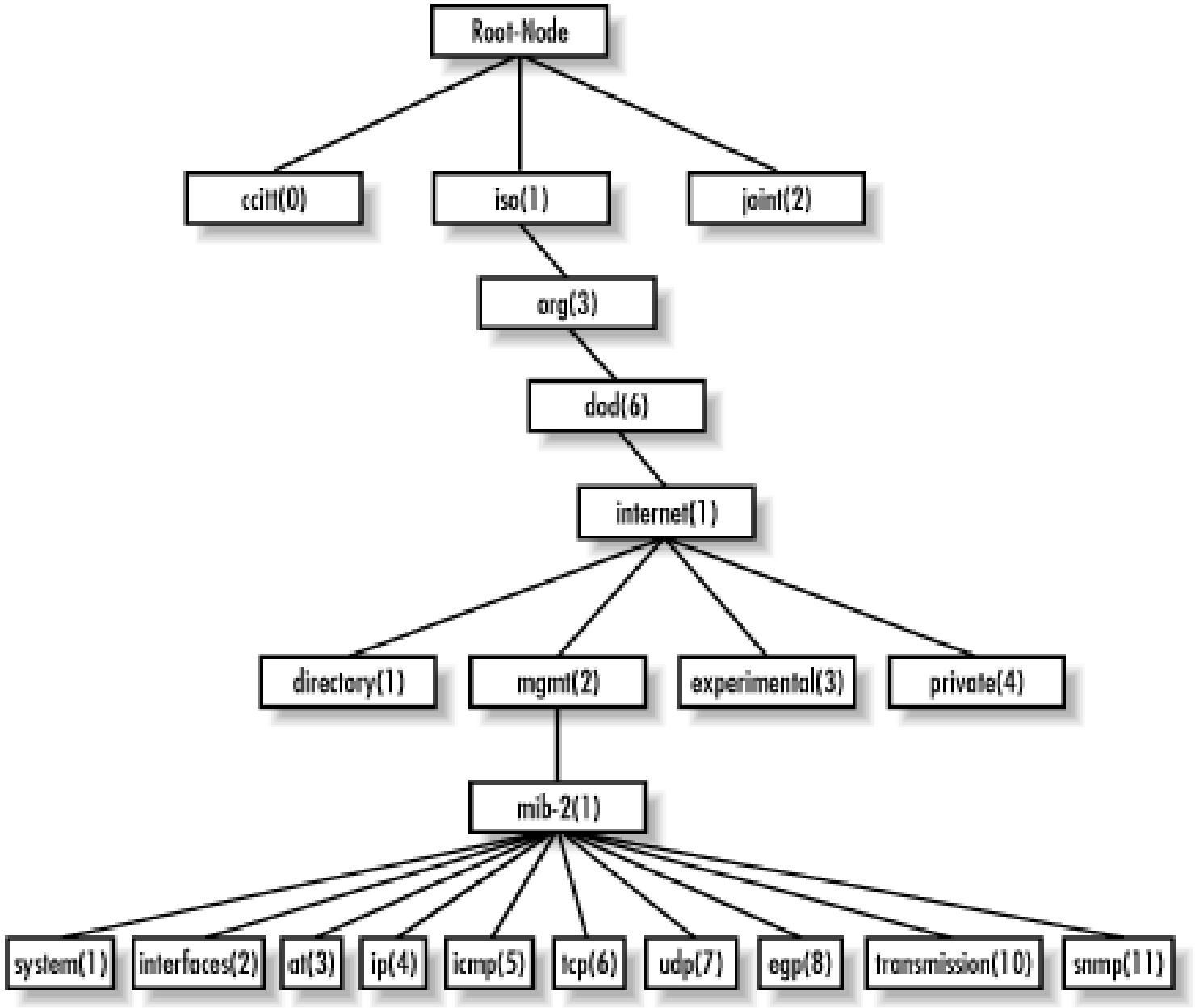
Root-Node
ccitt(0)
iso(1)
joint(2)
org(3)
dod(6)
internet(1)
directory(1)
mgmt(2)
experimental(3)
private(4)
mib-2(1)
system(1)
interfaces(2)
at(3)
ip(4)
icmp(5)
tcp(6)
udp(7)
egp(8)
transmission(10)
snmp(11)